REV.	DATE	REMARK	ECN NO.	NAME
A	09.08.04'	RELEASE		

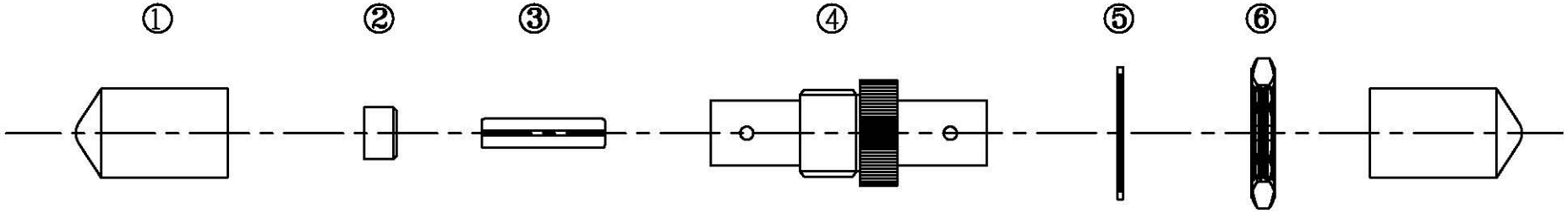

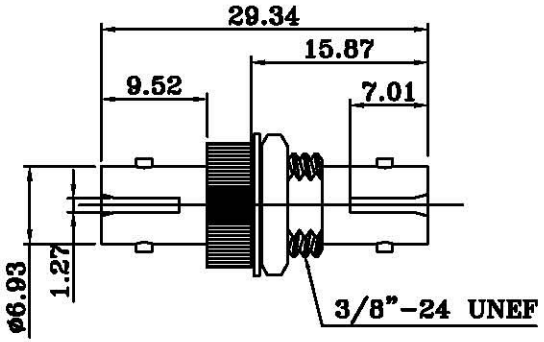

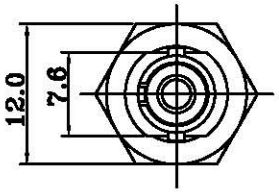

NOTE:
1.HOUSING MATERIAL:Zn-Alloy
2.ALIGNMENT SLEEVE:PhBr/ZrO2
3.INSERTION LOSS:0.2dB MAX
4.DURABILHTY(500 MATINGS):0.15 dB MAX INCREASE
5.RETENTION FORCE:200~600GRAMS
6.OPERATING TEMPERTURE:-40°C~+80°C

NO	Descriptions	Material	Q'ty
6	3/8"-24 UNEF	Fe-Ni	1
5	Washer	Steel-Ni	1
4	ST Adaptor Body Simplex	Zn-Alloy	1
3	Sleeve	PhBr/ZrO2	1
2	Bush	Cu-Ni	1
1	ST Adaptor Cap	PVC	2

▽ :Critical Dim
● :Major CAV

Tolerances
0. ±0.50
0.0 ±0.20
Angle ±2°

PART NAME	ST Adaptor Simplex		
DRAWN BY	William	DRAWING NO.	
CHECKED BY		DRAWING SIZE	A4
APPROVED BY	Lion	UNIT	mm
		PAGE	