ROHS Compliant

DATE	2012/08/15
Revision	A

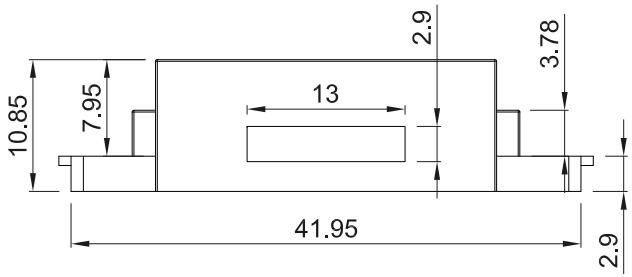

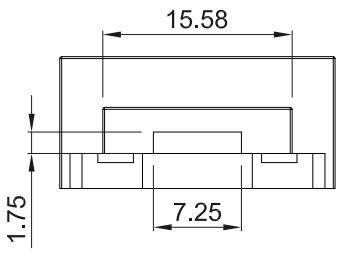

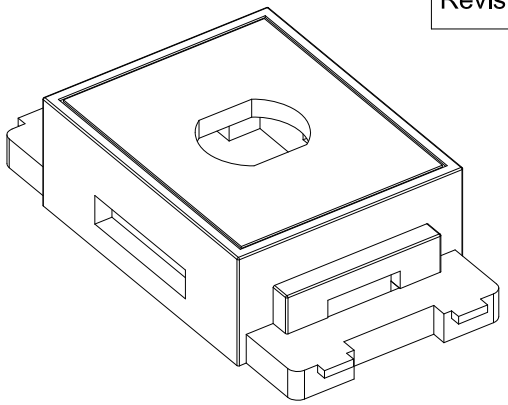

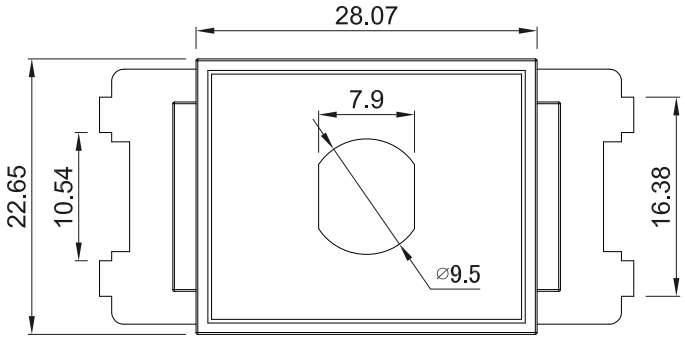

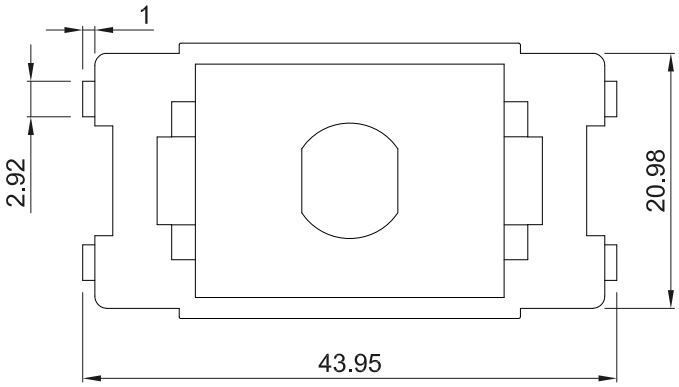

TOLERANCE	
.XXXX	-----
.XXX	0.10
.XX	0.25
.X	0.38

P/NO. NNTWPA-ST

MATERIAL
UL-94-V-0 Fire-Resistance ABS
Snap-in Module Type : ST
Standard Color : White

REV.	DESCRIPTION	ENG.	APPROVAL

ITEM. Snap-in Module	CO. SY	S/N. NNTWPA-ST
DR. Wakka 2012/08/15	APPD.	CHKD.
NEX1 Technologies Co., Ltd TEL: (02) 2518-1300 FAX: (02) 2501-4209		FILE. NNTWPA-ST
		SCALE /
		UNIT mm / SIZE A4